ART 135GB ANSI

DN350-600 Ductile Iron Butterfly Valve Lugged and Tapped

Features

- Flange mounting ANSI Class 150
- BS5155 (BS EN 593)
- ISO 5211 direct mount
- Epoxy coat finish
- MSS-SP-67

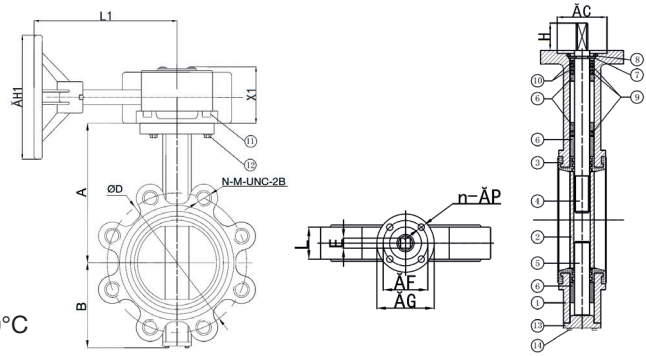

Technical data

Max pressure: 17.2 Bar

Working temp: -10°C to +110°C

DN	350	400	450	500	600
ĂD	476.3	539.8	577.9	635.0	749.3
N-M-UNC-2B	12-1-8UNC-2B	16-1-8UNC-2B	16-1.1/8-7UNC-2B	20-1.1/8-7UNC-2B	20-1.1/4-7UNC-2B
A	345	390	422	470	552
B	262	305	341	373	445
C	71.0	100.5	100.5	100.5	130.5
H	40	52	52	64	70
ĂG	125	175	175	175	210
n-ĂP	4-12	4-18	4-18	4-18	4-23
ĂF	102	140	140	140	165
L	78	102	114	127	154
E	22	27	27	27	36
H1	300	300	300	300	300
L1	225	131	131	131	138
X1	84	264	264	269	307
Torque	840	1260	2070	2670	5295
Kv	10790	14081	17842	22030	31780
Kgs	88.0	168.0	198.0	238.8	334.8

N.	Part Name	Materials
1	Body	Ductile Iron GGG40
2	Disc	Stainless Steel 316 (CF8M)
3	Seat	WRAS EPDM
4	Upper Shaft	Stainless Steel 431
5	Lower Shaft	Stainless Steel 431
6	Bushing	PTFE
7	Cotter Pin	Spring Steel 65Mn
8	Circlip	Spring Steel 65Mn
9	O-Ring	WRAS EPDM
10	Ring	Nylon 6 PA6
11	Gearbox	DI
12	Bolt	Stainless Steel 304
13	End Cover	Ductile Iron GGG40
14	Bolt	Stainless Steel 304

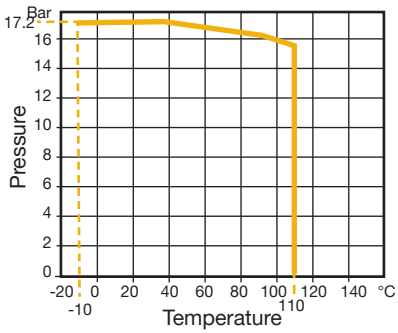

V1. Dimensions in mm

This data sheet is designed as a guide and should not be regarded as wholly accurate in every detail. We reserve the right to amend the specification of any product without notice.